OPTIONS

Seat
- soft wood
- hardwood of European origin
- hard wood (oil finish)
- premium hard wood

Methods of installation
- attached by bolts to foundation

Additional table
- none
- left side

Additional bicycle rack
- none
- left side
- right side
- both sides

Wireless charger
- none
- 2 A, 10 W

Wi-Fi hotspot
- none
- 2.4 GHz; 3G, 4G (no SIM card included)

LED lights
- none
- 2 x 1m (4.8 W / 1m) - neutral white

Logo
- none
- milled in wood

DESCRIPTION

Photon 02.409.2 is a model equipped with **USB 3.0 quick charge** module for charging mobile devices and **wireless charger**. The proper functioning of the modules in the…

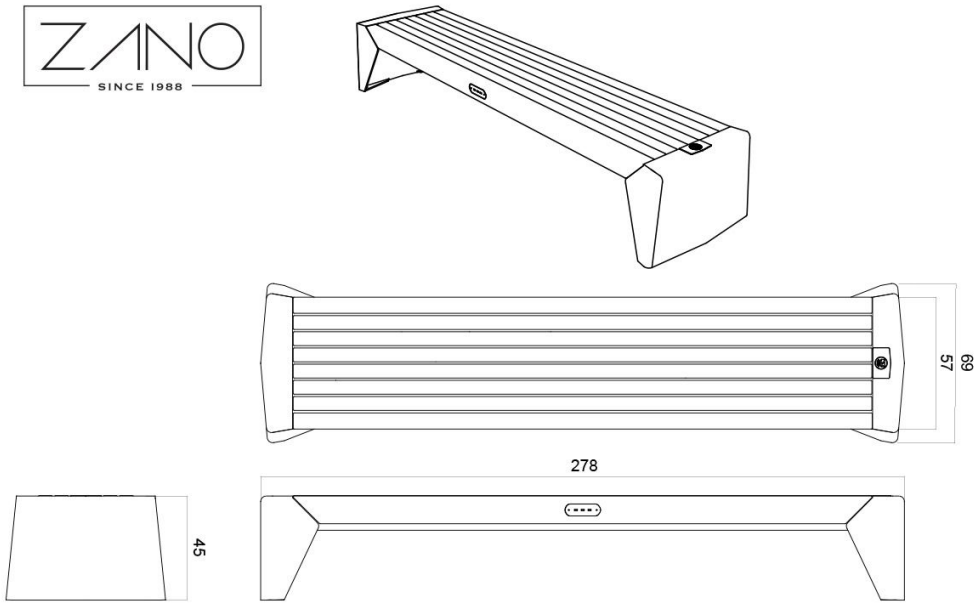

GENERAL TECHNICAL DATA

Materials
- wood: European coniferous or exotic
- steel: carbon or stainless

Basic equipment
- three USB quick charge ports

Electrical specifications
- power of the power supply: 100 W

Dimensions
- width: 278 cm
- height: 45 cm
- depth: 69 cm

Weight
- soft wood: 143 kg
- hardwood of European origin: 156 kg
- premium hard wood: 171 kg

ZANO

Product: Photon bench
Catalog number: **02.409.2**
Designer: Filip Babiarz

In accordance with the Polish Law on Copyright and Related Rights of 04.02.1994 (Offcial Journal of Laws No. 24, item 83, corrected: Journal of Laws No. 43, item 170) and in accordance with the EU copyright legislation including all EU directives and regulations on copyright , Zano Mirosław Zarotynski Company, reserves the copyright of drawings, descriptions, 3D models, renderings, graphics, content contained in offers, attachments to offers and all other documents. Its content is the intellectual property of ZANO Miroslaw Zarotinski company. The use of author's ideas, solutions, copying, distribution of photos, graphics or fragments of graphics, descriptive texts, for profit, without the permission of the author - ZANO Mirosław Zarotynski company - is prohibited and constitutes a copyright infringement and is punishable.

td>

NOTE: The drawings do not reflect the actual dimensions of the foundation. They are only exemplary assembly schemes taking into account the type of anchoring and the substrate material to which the furniture is to be fixed.

The size of the foundation depends on the local foundation conditions.

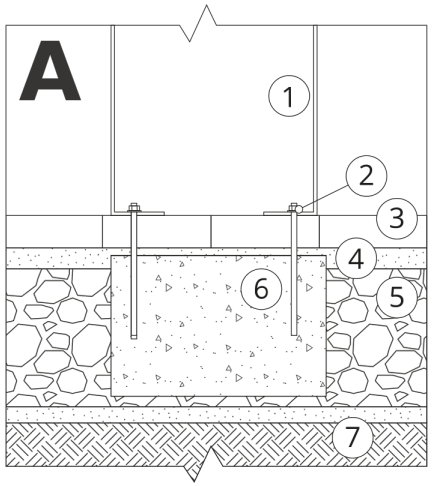

INSTALLATION INTO PAVING WITH FOUNDATION

Description of the assembly

1. ZANO product
2. Quick-action fastener or chemical anchor
3. Stone paving / concrete paving / stone slabs / concrete slabs
4. Sand ballast (approx. 2 - 4 cm)
5. Stone aggregate substructure
6. Concrete foundation, class C16/20 (top surface concrete 10 cm below paving surface)
7. Ground

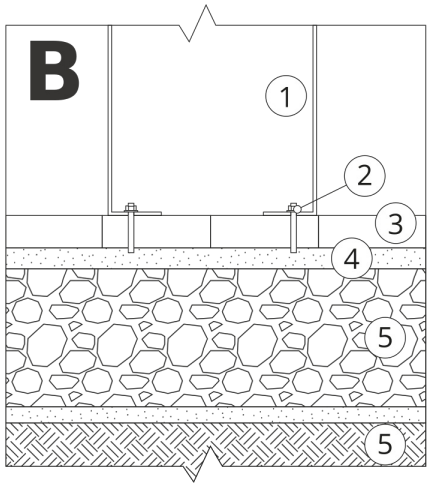

INSTALLATION TO PAVING

Description of the assembly

1. ZANO product
2. Quick-action fastener or chemical anchor
3. Stone paving / concrete paving / stone slabs / concrete slabs
4. Sand ballast (approx. 2 - 4 cm)
5. Stone aggregate substructure
6. Ground

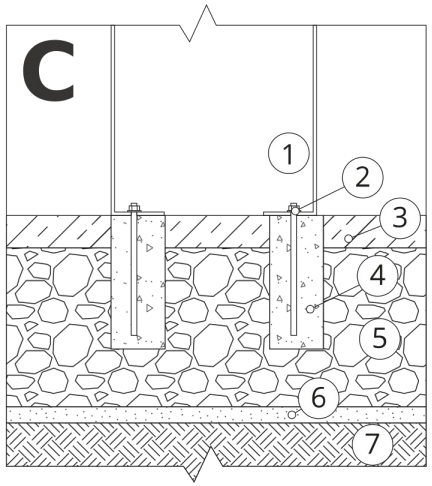

CONCRETE / ASPHALT MOUNTING

Description of the assembly

1. ZANO product
2. Quick-action fastener or chemical anchor
3. Fixed hardened surface e.g. concrete or asphalt
4. Concrete foundation, class C16/20 (top surface concrete 10 cm below paving surface)
5. Stone aggregate substructure
6. Sand ballast (approx. 2 - 4 cm)
7. Ground

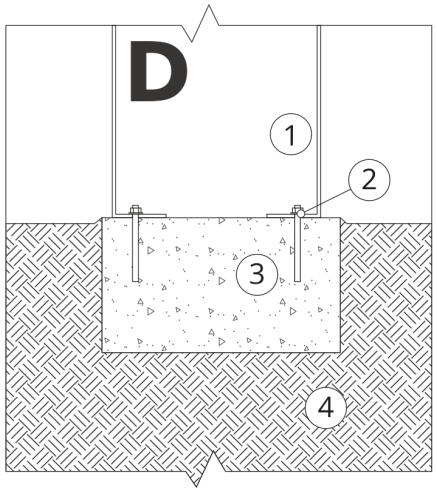

MOUNTING TO CONCRETE FOUNDATION

Description of the assembly

1. ZANO product
2. Quick-action fastener or chemical anchor
3. Concrete foundation, class C16/20 (top surface concrete 10 cm below paving surface)
4. Ground