OPTIONS

Seat
- soft wood
- hardwood of European origin
- hard wood (oil finish)
- premium hard wood

Methods of installation
- attached by bolts to foundation

DESCRIPTION

It is a one of the highest benches from Universe line. It can be a single object or part of a larger composition in public space. Fits almost to any place, from business park to children's playground. It is made of stainless steel and the wooden elements are spruce. Stainless steel can be replaced with black steel or black steel painted in any RAL color. The spruce can be replaced with exotic wood.

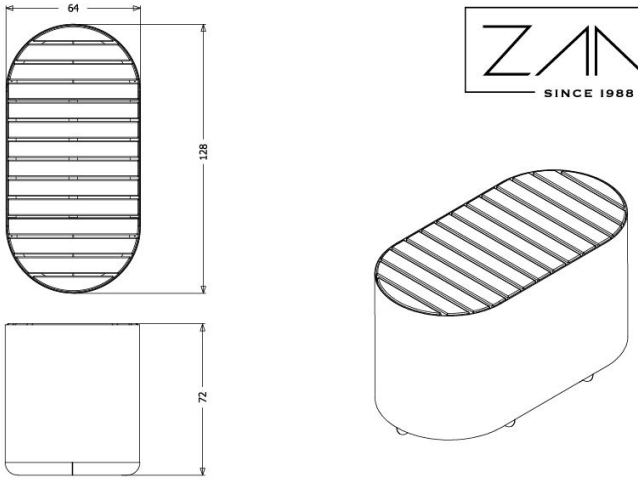

wymiary podane są w centymetrach

GENERAL TECHNICAL DATA

Materials
- wood: European coniferous or exotic
- steel: carbon or stainless

Weight
- 80 kg

Dimensions
- width: 64 cm
- length: 128 cm
- height: 72 cm

ZANO

Product: Universe bench
Catalog number: **02.455.4**
Designer: Filip Babiarz

In accordance with the Polish Law on Copyright and Related Rights of 04.02.1994 (Offcial Journal of Laws No. 24, item 83, corrected: Journal of Laws No. 43, item 170) and in accordance with the EU copyright legislation including all EU directives and regulations on copyright , Zano Mirosław Zarotynski Company, reserves the copyright of drawings, descriptions, 3D models, renderings, graphics, content contained in offers, attachments to offers and all other documents. Its content is the intellectual property of ZANO Miroslaw Zarotinski company. The use of author's ideas, solutions, copying, distribution of photos, graphics or fragments of graphics, descriptive texts, for profit, without the permission of the author - ZANO Mirosław Zarotynski company - is prohibited and constitutes a copyright infringement and is punishable.

td>

NOTE: The drawings do not reflect the actual dimensions of the foundation. They are only exemplary assembly schemes taking into account the type of anchoring and the substrate material to which the furniture is to be fixed.

The size of the foundation depends on the local foundation conditions.

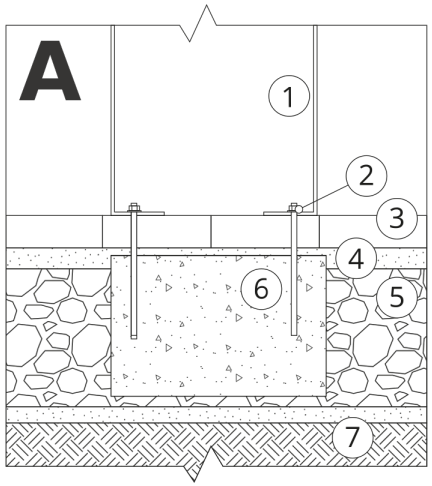

INSTALLATION INTO PAVING WITH FOUNDATION

Description of the assembly

1. ZANO product
2. Quick-action fastener or chemical anchor
3. Stone paving / concrete paving / stone slabs / concrete slabs
4. Sand ballast (approx. 2 - 4 cm)
5. Stone aggregate substructure
6. Concrete foundation, class C16/20 (top surface concrete 10 cm below paving surface)
7. Ground

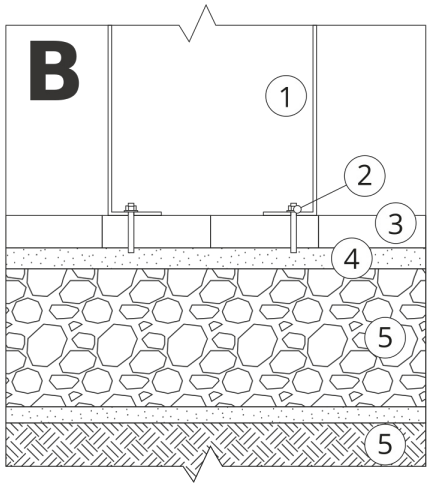

INSTALLATION TO PAVING

Description of the assembly

1. ZANO product
2. Quick-action fastener or chemical anchor
3. Stone paving / concrete paving / stone slabs / concrete slabs
4. Sand ballast (approx. 2 - 4 cm)
5. Stone aggregate substructure
6. Ground

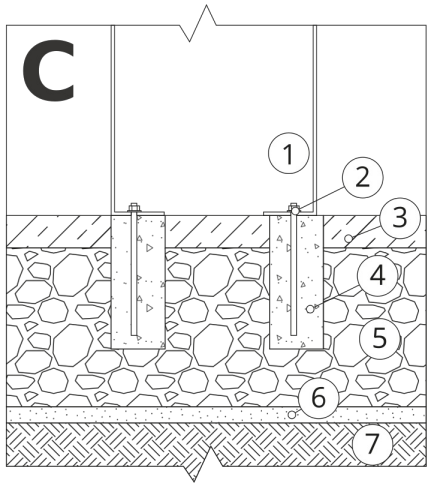

CONCRETE / ASPHALT MOUNTING

Description of the assembly

1. ZANO product
2. Quick-action fastener or chemical anchor
3. Fixed hardened surface e.g. concrete or asphalt
4. Concrete foundation, class C16/20 (top surface concrete 10 cm below paving surface)
5. Stone aggregate substructure
6. Sand ballast (approx. 2 - 4 cm)
7. Ground

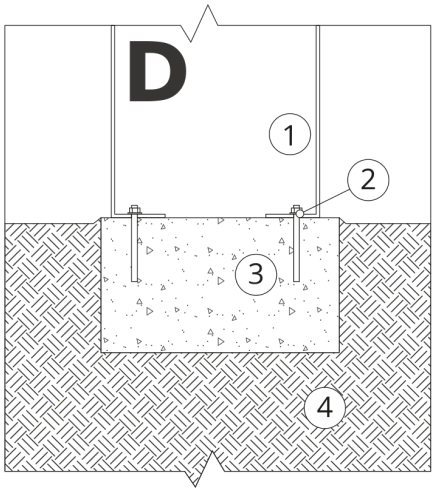

MOUNTING TO CONCRETE FOUNDATION

Description of the assembly

1. ZANO product
2. Quick-action fastener or chemical anchor
3. Concrete foundation, class C16/20 (top surface concrete 10 cm below paving surface)
4. Ground